L-holder type HLC

L-Holder with rubber vibration isolator

Brand

- SUFIX

Application

- Mounting of components of airconditionning or ventilation systems

Specifications
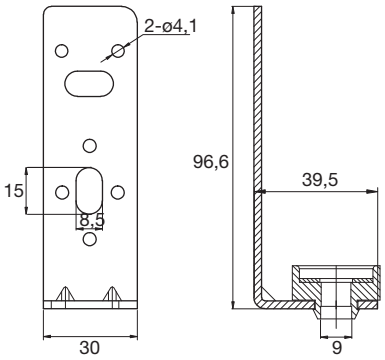
- Vibration isolator with holes for moutning of threaded rods M8
- Maximum weight: 80 kg